LED Controller

P6X Multi zone touch panel

Technical Specs:

P6X: CCT Panel

- Input Voltage: AC85V-265V
- Output Signal: DMX512+2.4G
- Dimming Range: 5%-100%
- Working Temperature: -20°C~55°C
- Dimensions: L86×W86×H36(mm)
- Weight(N.W): 230g

Receiver（R4-2.4G）

- Working Voltage: DC12V-DC24V
- Output Current: Max 5A×4CH
- Output Power: Max 240W(12V)/480W(24V)
- Receiver Distance: 30M
- Working Temp: -30°C~55°C
- Dimensions: L176×W46×H30(mm)
- Weight(N.W.): 110g

Installation:

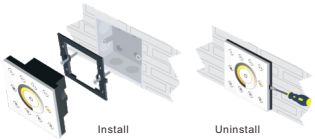

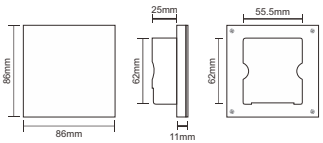

Key Functions:

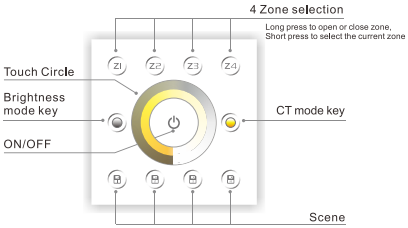

※ Long press ⏻ to turn on/off the buzzer.

※ Short press 💾 to call scene, long press 💾 to save scene.

Receiver instruction:

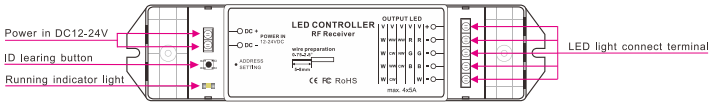

The matching method between panel and receiver:

learning ID: Press ID learning button on the receiver for 3 seconds. when the indicator light is on, press any zone key on the touch panel, the indicator light flashes（the frequency is 1Hz）, activated.

Cancel ID: Press ID learning button on the receiver for 5 seconds. When the indicator light flashed quickly（the frequency is 5Hz）, and all learnt IDs have been canceled.

Notice: The receiver can memorize up to 8 IDs. When receiving control information from any learnt ID, it can be controlled. If the memorized ID up to 8, long press learning key for 3 seconds to get out of the learning status, cancel the ID and reset. The receiver can not record the different zone on the same panel, if you want to control the other zone with the same panel, you need to cancel the ID and reset.

Wiring Diagram:

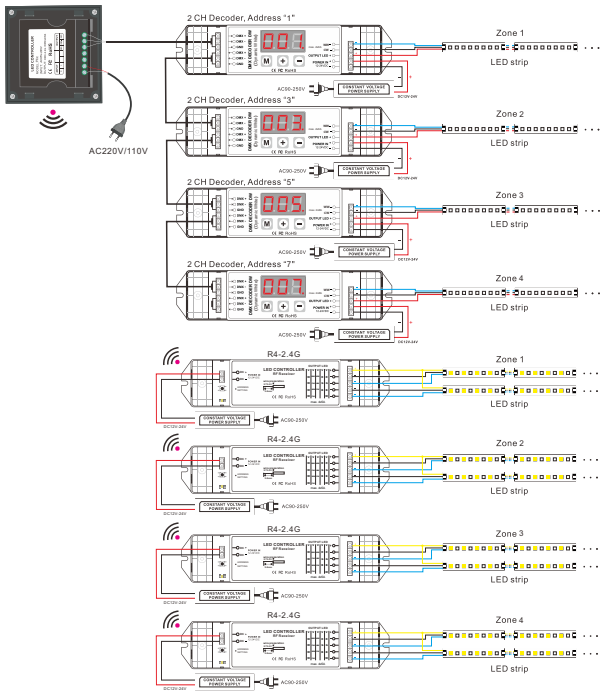

After-Sales:

From the day you purchase our products within 3 years, if being used properly in accordance with the instruction, and quality problems occur, we provide free repair or replacement services except the following cases:

1.Any defects caused by wrong operations.
2.Any damages caused by inappropriate power supply or abnormal voltage.
3.Any damages caused by unauthorized removal, maintenance, modifying circuit, incorrect connections and replacing chips.
4.Any damages due to transportation, breaking, flooded water after the purchase.
5.Any damages caused by earthquake, fire, flood, lightning strike etc force majeure of natural disasters.
6.Any damages caused by negligence, inappropriate storing at high temperature and humidity environment or near harmful chemicals.
7.Product has been updated.

Kindly Reminder:

1.Power Source Selection

Power source must be DC constant voltage type of power supply. Due to the efficient output in some power supplies are only 80% of total, so please select at least 20% higher output power supply than the consumption of LED lights.